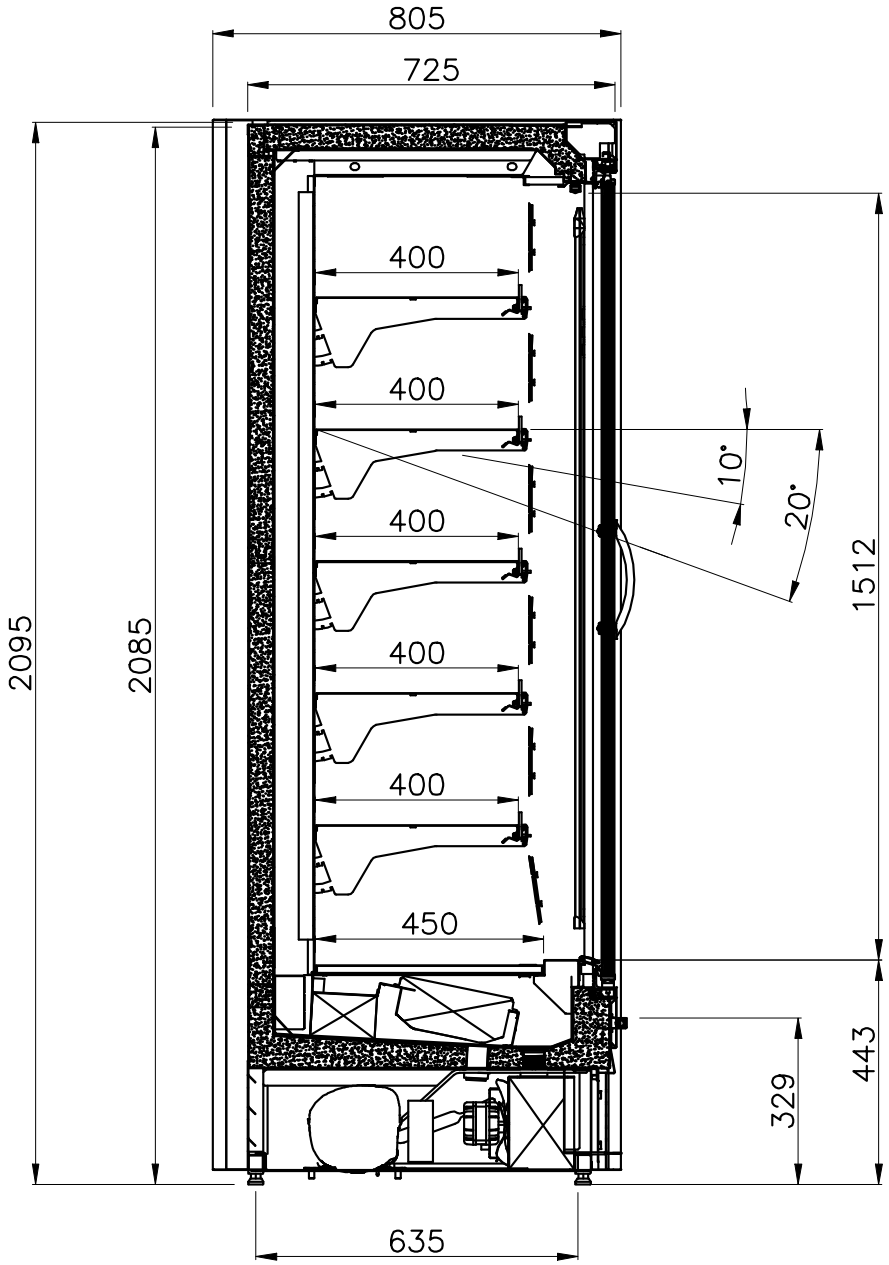

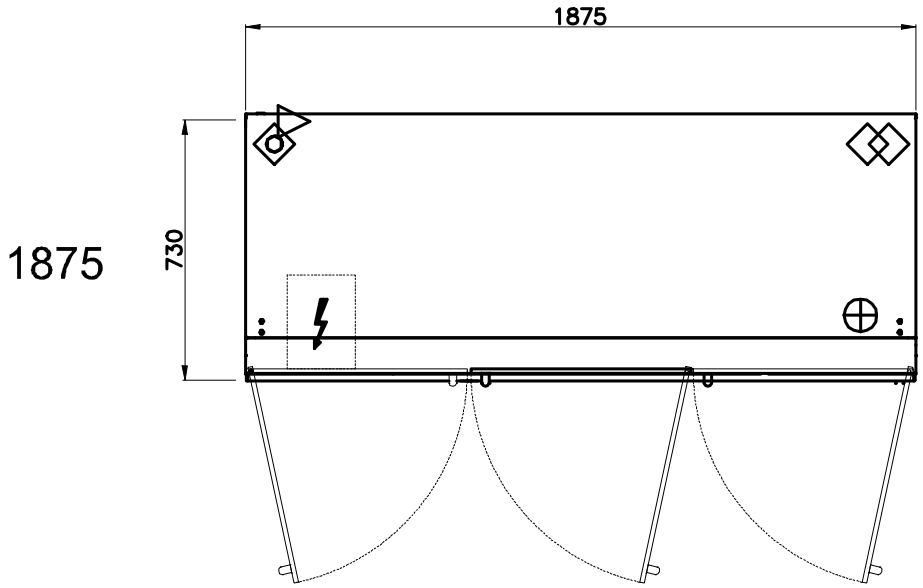

Side-Panels

Control Panel Position

Liquide / Suction Line

Drainage Point

Eletric Power Supply

TEFCOLD®